Low strength joint

Low strength joints are used to put together sheet metal or plastic materials and most often non-metrical thread forming screws are used. The property class of low strength joints does not have any specific value.

When designing low strength joints it is usually not possible to follow the guideline “the screw should always be the weakest part” due to the low strength of the sheet metal/plastic material compared to the fastener. It is therefore important to create a large assembly window (see figure below) to minimize the risk of female thread stripping during assembly.

If possible**: thread forming torque ≤ 1/3 of failure torque**

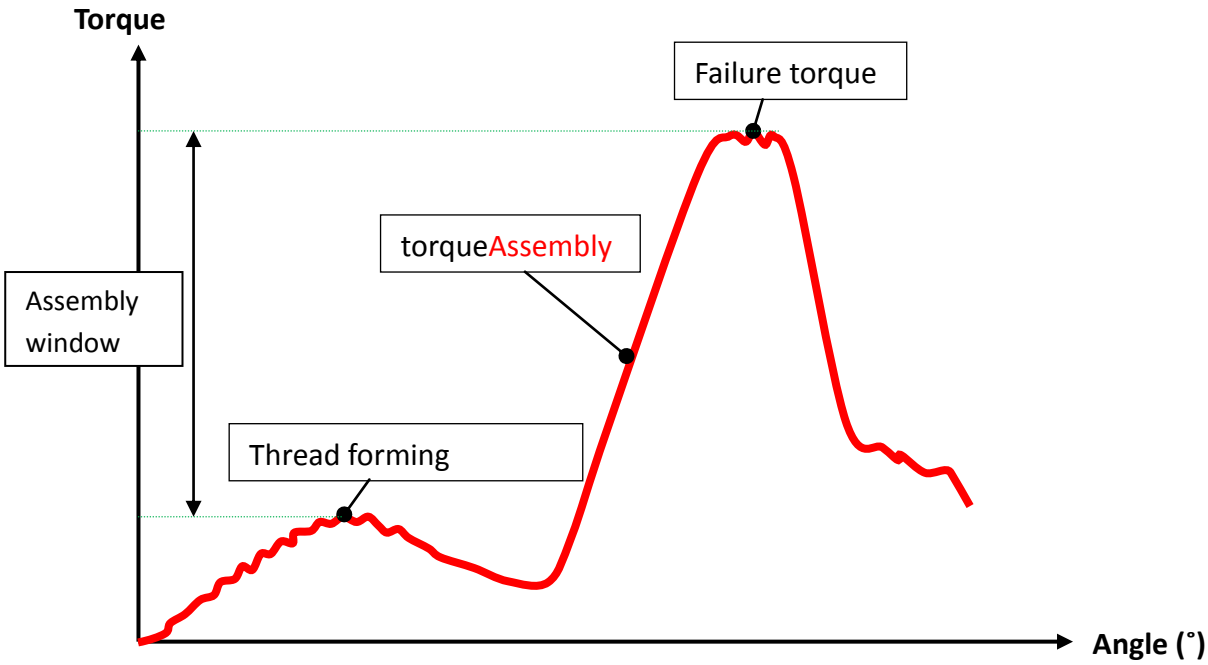

$$\text{Assembly torque} = \frac{Thread\ forming\ \ torque + Stripping\ torque}{2}$$

Sheet metal application

According to SS 1523 there are three types of sheet metal joints (see Figure 1 below).

3.1 Types of joints

Type 1

Holes drilled or punched in one operation. No clearace hole in upper plate.

Type 2

Holes drilled or punched in two operations. Clearance hole in upper plate. The thread hole can be split stamped.

Type 3

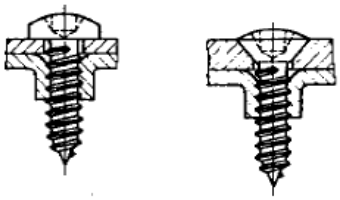

Holes punched and extruded in two or three operaitons. Clearance hole in upper plate.

Figure 1. Types of sheet metal joint according to Swedish standard SS 1523)

The joint types have strengths and limits according to Figure 2 below.

Requirement	Type of joint	Mark-setting
Strength	1	Risk of breaking up when fitting in thin sheet metal. Not intended for severe stresses.
	2	Comparatively good strength.
	3	Intended for severe stresses and where repeated dismantling can be anticipated.
Assembly	1	Both the holes are drilled at the same time when assembling. There are no fitting difficulties.
	2 and 3	When the hole for the thread is made before assembly, difficulties may arise when fitting.
Cost	1 and 2	Low cost. Drilling fixture or punching tool may be required.
Limits	1	The top plate must not be thicker than the distance *a* according to the figure in clause 4.1.
	1 and 2	If the top plate is thinner than a (in countersunk head: head height + a), the thread runout can end up in the casting thread. In thin sheet metal, the joint can as a result be weakened. The split stamped hole has sharp edges and this shall be avoided as there is risk of damage being done to the fingers.
	3	In hard material (exceeding HB 120) there is risk of cracks in the flange.

Figure 2. Strength and limits according to Swedish standard SS 1523, clause 4.1 is Figure 3.

Design of holes

The diameter of the clearance hole in Type 2 and Type 3 joint is recommended to be according to Figure 3 below.

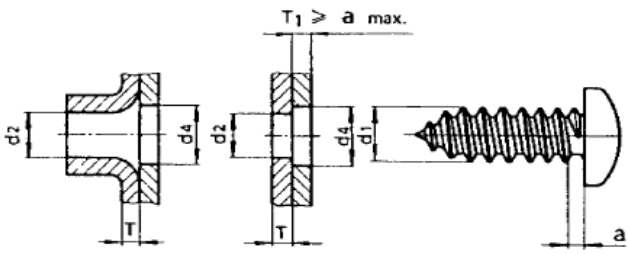

Thread	ST 2,2	ST 2,9	ST 3,5	ST 4,2	ST 4,8	ST 5,5	ST 6,3	ST 8
d_4	2,8	3,6	4,2	5	5,8	6,6	7,4	9,5

Figure 3. Dimension of clearance hole according to SS 1523.

Thread size d_1 = major diameter P = pitch	**Plate thickness,** ***T***	**Hole diameter, d_2** Tolerance: H12 or H13			
		Steel, brass and copper [1]		Aluminium	
		Drilled or punched holes	Extruded or split stamped holes	Drilled or punched holes	Extruded or split stamped holes
ST 2,2	- 0,56	1,6			
d_1 = 2,24	(0,56) - 0,75	1,7		1,6	
P = 0,79	(0,75) - 0,88	1,8		1,6	
	(0,88) - 1,13	1,8		1,6	
	(1,13) - 1,38	1,9		1,7	
	(1,38) - 1,5	1,9		1,8	
ST 2,9	- 0,56	2,2	2,2		
d_1 = 2,9	(0,56) - 0,63	2,3	2,5		2,2
P = 1,06	(0,63) - 0,75	2,3	2,5	2,2	2,2
	(0,75) - 0,88	2,4	2,5	2,2	2,2
	(0,88) - 1,25	2,4		2,2	2,2
	(1,25) - 1,38	2,4		2,2	
	(1,38) - 1,75	2,5		2,3	
	(1,75) - 2,5	2,6		2,4	
ST 3,5	- 0,56	2,6	2,8		
d_1 = 3,53	(0,56) - 0,75	2,7	2,8		2,8
P = 1,27	(0,75) - 0,88	2,7	2,8	2,6	2,8
	(0,88) - 1,25	2,8		2,6	2,8
	(1,25) - 1,38	2,8		2,7	
	(1,38) - 1,75	2,9		2,8	
	(1,75) - 2,5	3		2,8	
	(2,5) - 3	3,2		3	
	(3) - 6			3	
ST 4,2	- 0,5		3,5		
d_1 = 4,22	(0,5) - 0,63	3,2	3,5		3,5
P = 1,41	(0,63) - 0,88	3,2	3,5	2,9	3,5
	(0,88) - 1,13	3,2	3,5	3	3,5
	(1,13) - 1,38	3,3	3,5	3,2	3,5
	(1,38) - 2,5	3,5		3,5	
	(2,5) - 3	3,8		3,7	
	(3) - 3,5	3,9		3,8	
	(3,5) - 10			3,9	
ST 4,8	- 0,5		4		
d_1 = 4,8	(0,5) - 0,75	3,7	4		4
P = 1,59	(0,75) - 1,13	3,7	4	3,7	4
	(1,13) - 1,38	3,9	4	3,7	4
	(1,38) - 1,75	3,9		3,7	
	(1,75) - 2,5	4		3,8	
	(2,5) - 3	4,1		3,8	
	(3) - 3,5	4,3		3,9	
	(3,5) - 4	4,4		3,9	
	(4) - 4,75	4,4		4	
	(4,75) - 10			4,2	

Thread size	Plate thickness,	Hole diameter, d_2 Tolerance: H12 or H13			
d_1 = major diameter	T	Steel, brass and copper [1]		Aluminium	
P = pitch		Drilled or punched holes	Extruded or split stamped holes	Drilled or punched holes	Extruded or split stamped holes
ST 5,5	- 1,13	4,2	4,7		
d_1 = 5,46	(1,13) - 1,38	4,3	4,7	4,1	
P = 1,81	(1,38) - 1,5	4,3		4,1	
	(1,5) - 1,75	4,5		4,2	
	(1,75) - 2,25	4,6		4,4	
	(2,25) - 3	4,7		4,6	
	(3) - 3,5	5		4,6	
	(3,5) - 4	5		4,8	
	(4) - 4,75	5,1		4,8	
	(4,75) - 10			4,9	
ST 6,3	- 1,38	4,9	5,3		
d_1 = 6,25	(1,38) - 1,75	5		5	
P = 1,81	(1,75) - 2	5,2		5	
	(2) - 3	5,3		5,2	
	(3) - 4	5,8		5,3	
	(4) - 4,75	5,9		5,4	
	(4,75) - 5			5,6	
	(5) - 10			5,8	
ST 8	- 1,38	6,4			
d_1 =8	(1,38) - 1,75	6,5		6,5	
P = 2,12	(1,75) - 2	6,7		6,5	
	(2) - 3	6,8		6,7	
	(3) - 4	7,2		6,8	
	(4) - 4,75	7,4		6,9	
	(4,75) - 5			7	
	(5) - 10			7,2	

1) HB 120 max. If the material is harder it can be necessary to increase the table values by 0,1 - 0,2 mm.

Figure 4. Recommended hole size depending on screw dimension, sheet thickness, hole type and material according to SS Swedish standard SS1523.

Assembly

For thread-forming screws, the fracture torque of the joint shall always be at least three times the thread-forming torque of the joint regardless of the thread profile. If the torque given in table below (**Fel! Hittar inte referenskälla.**) is lower than the thread-forming torque, that is the screw head stops half way down to the base material, the joint must be further analysed. This also applies if the torque in the table below is higher than the relevant fracture torque of the joint.

Recommended torque (ST 4.8)			
Steel Thickness 1 - 1,5 mm	Steel Thickness >1,5 mm	Aluminium Thickness ≈ 1mm	Aluminium Thickness > 1 mm
1 – 3 Nm	3,5 – 7 Nm	≈ 1 Nm	2 – 4 Nm
Recommended torque (ST 6.3)			
Steel Thickness 1 - 1,5 mm	Steel Thickness >1,5 mm	Aluminium Thickness ≈ 1mm	Aluminium Thickness > 1 mm
2 – 4 Nm	5 – 9 Nm	≈ 2,5 Nm	3 – 6 Nm

Figure 5. Recommended assembly torque on ST-screws.

When assembly in thin sheet metal (thin = less than 1/3 of screw diameter) special design of screw could be used to avoid that the screw tracking on helix angle (see *Figure 6* below).

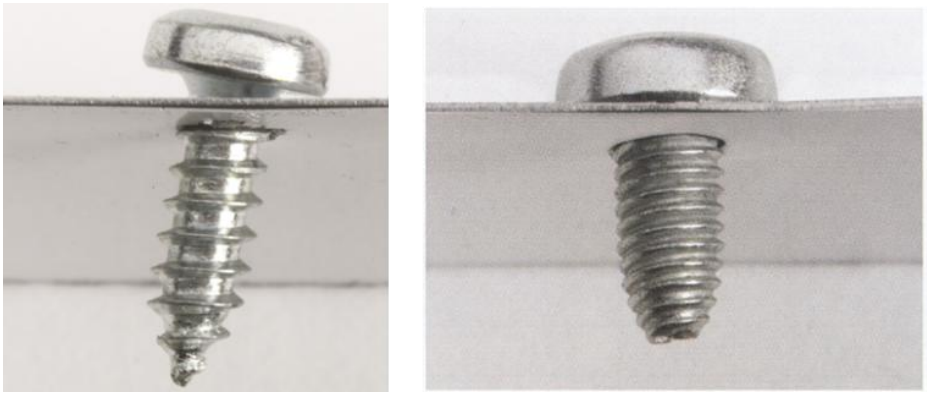

Figure 6. Comparing a Type AB screw (left) and a FASTITE® 2000™ (right) in thin sheet metal.

One screw specially design for thin sheet metal is the FASTITE® 2000™ screw.

The twin helix provides a starting stability according to Figure 7 below.

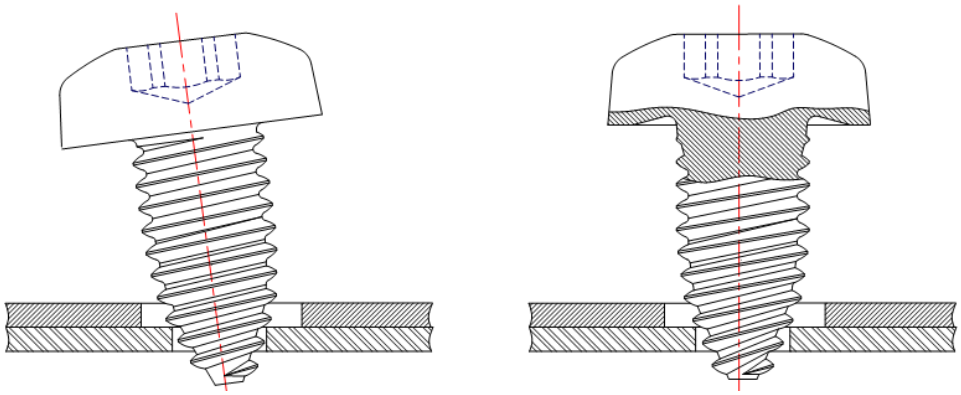

Figure 7. Comparing a Type AB screw (left) and a FASTITE® 2000™ (right) in thin sheet metal.

The undercut allows the material to flow under the head which results in an increased thread engagement.

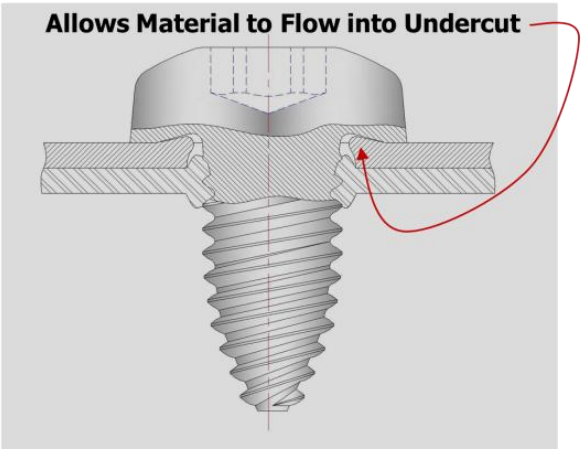

Figure 8. FASTITE® 2000™ showing the function of undercut head.

Plastics application

Plastic is the general common term for a wide range of synthetic or semi synthetic organic amorphous solid materials. Plastics are typically polymers of high molecular mass, and may contain other substances to improve performance and/or reduce costs.

To minimize the risk of fracture in the plastic boss wall (Figure 9) a special screw design is recommended to use in plastics applications.

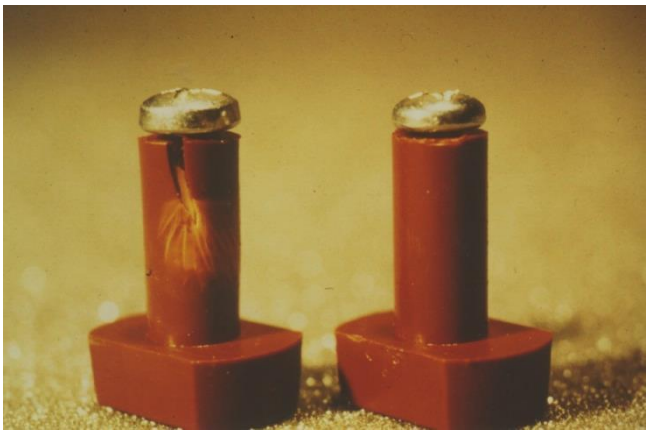

Figure 9. Material ABS, to the left sheet metal screw 60˚ threaded flank angle, to the right screw optimized for plastic appplication 30˚ threaded flank angle (CONTI Fastneners AG).

According to SFN handbook screw geometry suitable for plastics is:

- Low flange angle < 40˚
- Small inner diameter < 0,65 x D
- High pitch > 0,35 x D

One screw optimised for plastic application is the PF screw (Figure 10).

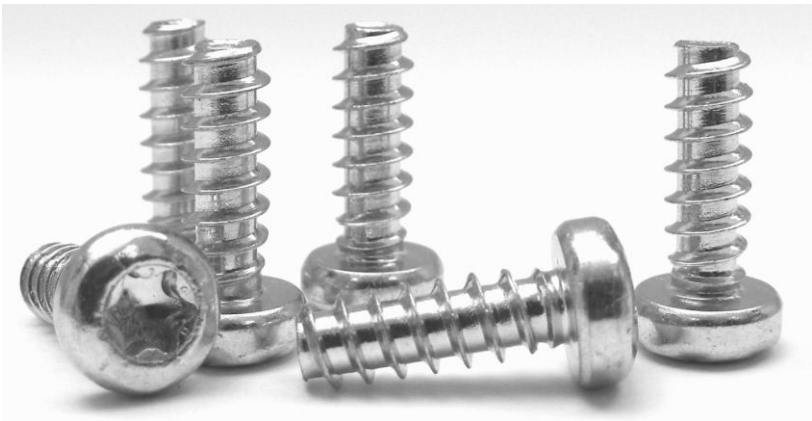

Figure 10. REMFORM® II™ "HS" SCREWS, optimized design for plastic applications.

Design guidelines of the boss.

The guidelines below are recommendation when using REMFORM® II™ by CONTI Fasteners AG

RECOMMENDED HOLE SIZES

MATERIAL TYPE	H HOLE DIA. Factor X Min. Screw Dia.
PP	0.75
PE	0.75
PA (Nylon 6 / 6.6)	0.75
ABS / PC Blend	0.75
ASA	0.75
ABS	0.75
PVC (rigid)	0.80
SAN	0.80
PS	0.80
PBT	0.80
PET	0.80
PC	0.80
PPO	0.80
PET 30% GF	0.80

SUGGESTED BOSS CONFIGURATION

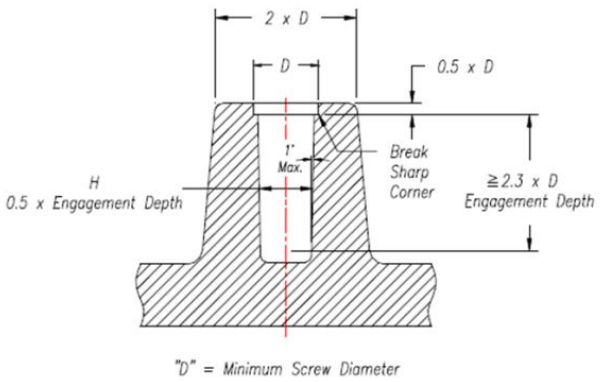

1) **Try to manufacture a draft angle as small as possible (~1°)**
2) **Calculate and measure the nominal hole size at a depth equal to half of the fastener's total engagement**
3) **On holes with long engagements or large draft angles, be sure the engagement at the bottom does not exceed 100%**

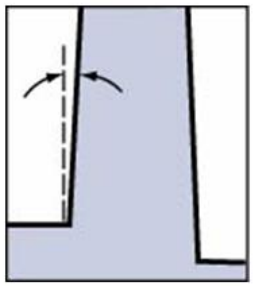

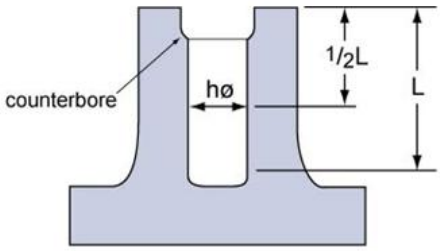

It is always recommended to use a counterbore to avoide the stress consentration at the top of the boss.

Thread engagement

- The measurement of full-sized fastener threads that are engaged in the nut member
- Lead thread is not counted
- Expressed in relationship to nominal diameter of screw e.g. **2xd**

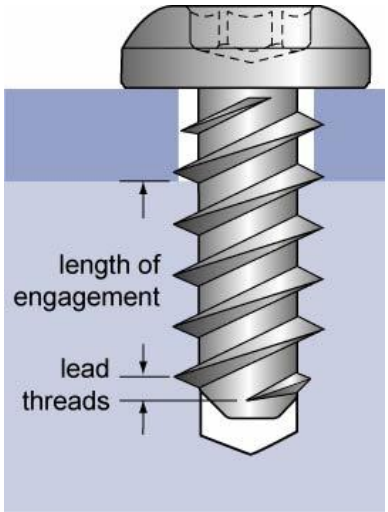

Figure 11. Thread engagement length (Reform II® screw).

Assembly PF screws

For thread-forming screws, the fracture torque of the joint shall always be at least three times the thread-forming torque of the joint regardless of the thread profile. If the torque given in table below (
Figure *12*) is lower than the thread-forming torque, that is the screw head stops half way down to the base material, the joint must be further analysed. This also applies if the table below torque is higher than the relevant fracture torque of the joint.

Recommended torque PF-screws				
PF 3	PF 3,5	PF 4	PF 5	PF 6
0,7 –1,0 Nm	1,1 – 1,5 Nm	2 – 2,5 Nm	3,0 – 4,0 Nm	4 - 6 Nm

Figure 12. Assembly torque recommended for PF screws.

When assembling screws in plastics heat is generated and the heat increases with higher RPM. Too much heat can soften the material and decreasing the failure torque.

It is therefore recommended to use an assembly speed of maximum 600 rpm.

Summary guidelines

- Test fasteners in the application before committing to hard tooling, if possible.
- Design to maximize drive-to-strip ratio.
- Minimize draft angle in boss ID.
- Have at least 1,5 full diameters of thread engagement.
- Try to keep drive gun speed at maximum 600 rpm.
- Remember that different plastics perform differently.